THE 411

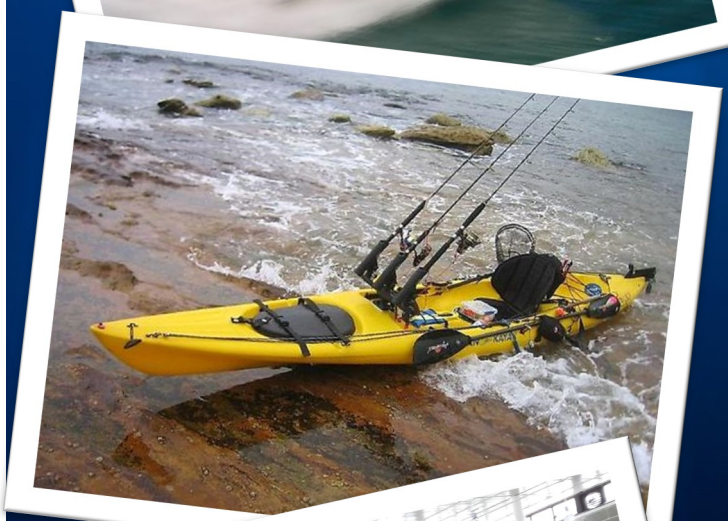

Hawaii Ocean Expo

"Anything & Everything to do with our Hawaiian Waters"

DO BUSINESS IN HAWAII'S LARGEST OCEAN-RELATED LIFESTYLE EVENT!

- WATERCRAFTS, BOATS, & KAYAKS
- SURF & SUP AND ACCESSORIES
- FISH & DIVE EQUIPMENT
- WATERSPORTS
- APPAREL & ACCESSORIES
- OCEAN-RELATED NEW PRODUCTS & SERVICES

FEATURES

- CHANCE TO WIN A BOAT
- GT MASTERS FISHING TOURNAMENT
- DEFEND & DESTROI SPEARFISHING TOURNAMENT
- OCEAN UNIVERSITY
- FOOD COURT
- KEIKI ZONE
- ENTERTAINMENT, GIVEAWAYS, & MORE!

JUNE 23 & 24, 2018

BLAISDELL EXHIBITION HALL

VERTICAL JUNKIES

RUSS INOUYE
808 371.7900
russinouye@gmail.com

PACIFIC EXPOS™

JADE CHUN
808 732.6037
jchun@pacificexpos.com

*Floor plan subject to change without notice.

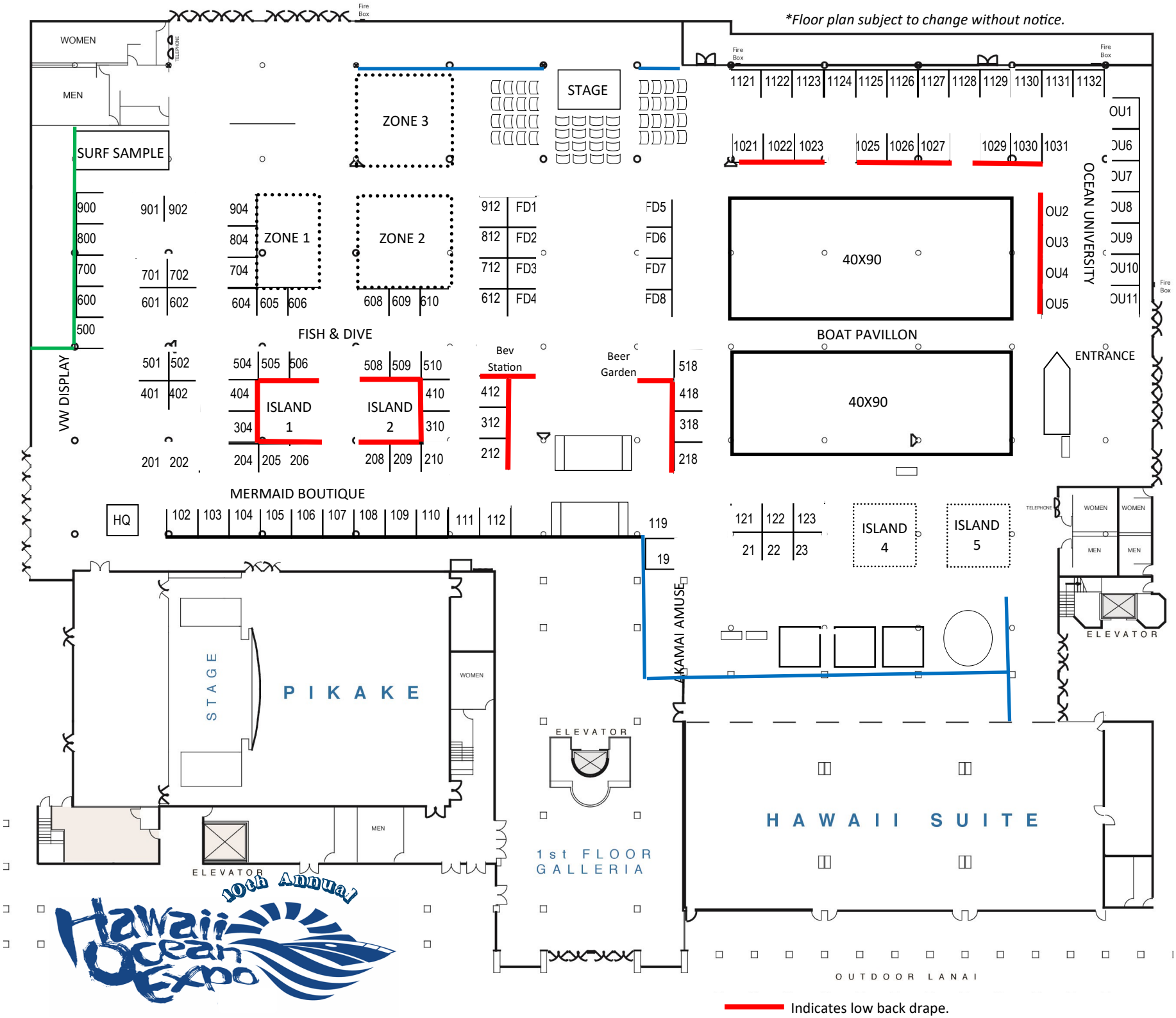

Indicates low back drape.

OFFICE USE ONLY:
INV#

JUNE 23 & 24, 2018

APPLICATION & CONTRACT

Company Name

Contact: FIRST NAME LAST NAME

Contact's Email Address

P: _____ F: _____ C: _____
Contact's Primary Phone/Fax/Cellular

Company Website

GE Tax License (required for vendors selling on show floor)

Mailing Address City State Zip

OTHER-Contact Name OTHER Contact Cellular Number OTHER Contact Email

CIRCLE THE MOST APPROPRIATE CATEGORY YOUR EXHIBIT (S) WOULD APPLY:

FOOD CLOTHING GIFTS JEWELRY CRAFTS HEALTH & BEAUTY SPORTS APPLIANCES ELECTRONICS TOYS SERVICES OTHER

PRODUCT DESCRIPTION: _____
List ALL products and/or services to be sold/distributed/demonstrated at the show, including brand names if applicable.

_____

Venue: Neal Blaisdell Center Exhibition Hall
777 Ward Avenue, Honolulu, Hawaii 96814

Move-in: **Friday, 06/22/18, 5pm to 9pm**
Saturday, 06/23/18, 8am to 10am
NO DRIVE-INS PERMITTED

Expo: **Day 1, Saturday, 06/23/18 10am to 7pm**
Day 2, Sunday, 06/24/18, 10am to 5pm
*vendors may enter at 8am on show days

Move-out: **Sunday, 06/24/18, 5pm to 10pm**
*All vendors must be out by 10 pm;
NO EXCEPTIONS.

***Booth includes:** **10'x10' space w/ 3' side rail, 8' back drape**
1 - 6' Skirted Table
2 - Chairs

***Booth *does not* include: Wastebasket, carpet, electricity including overnight electricity (all these items can be rented from ICS if needed). An exhibitor packet will be sent out to you prior.**
***Overnight security on Friday and Saturday night only.**

Parking: **Vendors responsible for fees.**
Decorators: **ICS is the show decorator. Please contact at 808-832-2430 for your show needs, including FORKLIFT SERVICES. Vendor will be invoiced for these services.**
Vendor Bands: **5 issued per day** per booth. Bands must be worn before entry granted on show days. Bands will be distributed on Friday and must be worn before entering on show days.

QTY	SPACE TYPE	PRICE PER	TOTAL
____	**Zone 30'x30'**	x **$2,800.00 =**	**$**_____
____	**Island 20'x20'**	x **$2,000.00 =**	**$**_____
	Booth Space		
____	**Corner 10'x10'**	x **$650.00 =**	**$**_____
____	**Inline 10'x10'**	x **$550.00 =**	**$**_____
____	**Non-Profits**	x **$250.00 =**	**$**_____
____	**Grp. Liability Insurance Add $65**		$_____

(If you cannot provide proof of insurance, we may add on coverage automatically that will be paid by you, subject insurance carrier approval)

SUBTOTAL $_____
4.712% Hawaii GE Tax $_____

TOTAL DUE **$**_____

BOOTH CHOICES:
1st_____ **2nd**_____ **3rd**_____
(Non-Profits not included) Booths are not confirmed until full payment and all completed documents have been submitted. Booth fees are non-refundable and non-transferable. Booth choices are not guaranteed.

PAYMENT METHODS:

☐ **CHECK # (payable to Pacific Expos)** _____ **in the amount of $**_____
☐ **CREDIT CARD CARDHOLDER NAME:** _____
CREDIT CARD # _____ **Exp**_____/_____
Amount to be charged $_____ **Sec.Code** _____ **Billing Zip Code** _____
☐ **CASH. Amount $**_____

I have read and agree to this Contract's Terms & Conditions as reflected on pages 2 & 3:

_____Date_____
Signature

OFFICE USE ONLY:
☐ Application
☐ Contract
☐ Insurance
☐ Payment
☐ Sales Logged
☐ Exhibitor Pkt Sent
Sales_____

Booth #_____

SUBMIT APPLICATIONS via mail to PACIFIC EXPO 2200 Kamehameha Highway Suite 201 Honolulu HI 96817
VIA Email: sales@pacificexpos.com **/ Phone: 808 732.6037 / pacificexpos.com**
Your signature indicates acceptance of all management's terms and conditions, including any fines issued, as listed in this agreement and issued by Management.

GENERAL BOOTH RESTRICTIONS

All terms in this section must be agreed to before booth is confirmed

****Management reserves the right to restrict or reject any exhibit which may be objectionable or not in keeping with the quality or character of the Expo. Points not specifically noted are subject to the review of Management.***

* **SIGHT LINE RULE**. To preserve the aisle sight line, ensure visibility of each Exhibitor, and encourage successful exchanges with other exhibitors and the public, each Exhibitor must comply with the sight line restrictions on page 4 of this agreement. Your signature below indicates acceptance of these sight line restrictions.

*Cardboard boxes must be kept out of public view.

*All trash, including pallets, must be removed from the show floor before show opens. DO NOT place in bins on the show floor.

*NO helium balloons allowed.

*Venue policy: All decorative material must be flame resistant, or treated with a flame retardant.

*Venue policy: No sticker giveaways; selling is OK. Exhibitor assumes responsibility for any stickers found stuck on the property.

*Venue policy: All carpeting must be taped down or will not pass Blaisdell inspection. Use of duct tape is prohibited. Blaisdell will do booth inspections before doors open on Fri.

*Venue policy: Once show doors open and the general public is on the floor, no wheels are allowed on the floor (with the exception of wheelchairs, strollers, and walkers) for liability purposes.

*Venue recommends all structures (including displays and banners) have a height restriction of 12 feet from the floor. Structures taller than 12 feet will be evaluated on a case-by-case basis.

*Bare EZ corner tent frames (metal) are not permitted. If this is part of your display, poles must be covered.

*All folding tables must be draped with tablecloth and/or skirt; tablecloth/skirt must reach ¾ of the way between tabletop and the floor.

*Booths must have professional signage (BANNERS). No handwritten signs. (Exhibitors are required to display proper signage, i.e. printed banner)

*Wastebaskets, carpet, and electricity are **NOT** included. You may bring own tables, chairs, carpet or order from ICES (808-832-2430). Electric must be ordered through ICES.

*Forklift services must be pre-ordered through ICES (808-832-2430). Forklift service NOT guaranteed on-site if you did not place an order.

*No sharing booth space, advertising, promoting outside companies, or selling any product or service not provided by company occupying booth space. If you are affiliated with more than one company (example: independent representatives of 2 or more companies), WITH MANAGEMENT APPROVAL, no more than TWO companies may be represented in booth space, and all products must be related, or in similar product categories. Call our office for details.

*Booth displays must remain intact for all show hours. Early breakdown could affect participation in future shows.

*GE License is required for all sales transactions on the show floor. License must be displayed in booth. Exhibitors responsible for ensuring compliance with the State of Hawaii Department of Taxation Cash Economy Enforcement Act of 2009 (Act 134). Contact the Department of Taxation for more information.

*All decorative and display material must be appropriate for the theme and venue. Attractive booths attract customers.

*Exhibitors have the right to display their services to the best of ability, but not to interfere, disrupt or cause a problem for other Exhibitors due to microphones, loud music, lighting, or other demonstration/pitch elements.

***FOOD EXHIBITORS: Must provide a copy of approved temporary food permit and insurance. There is a 35% gross sales fee payable to venue's concessionaire if there is no buyout of food. Limited to first come, first serve.** Inquire with management if you want to purchase the buyout. Absolutely NO dishwashing or dumping of food or grease in custodial and bathroom sinks. Exhibitors found dumping will be held responsible for any fines or fess associated with unclogging or snaking the drain. Prepackaged and ready-to-eat foods are acceptable. Other foods prepared and consumed onsite are allowed on a limited basis pre-approved by management, additional fees applicable.

***ALCOHOL CONSUMPTION:** Exhibitors are restricted from bringing in alcoholic beverages for personal consumption at the show. Any alcohol sampling must be done at the alcohol Exhibitors booth ONLY.

***USE OF MICROPHONES**: Management reserves the right to restrict the use of microphones in certain areas of the show. Exhibitors using microphones/speaker systems must notify Management and agrees to comply with noise restrictions set by Management. Please note use of these items may affect booth placement.

PLEASE COMPLETE THE FOLLOWING:

ARE YOU DOING PRODUCT DEMONSTRATIONS: Yes ___ No ___
If yes, which of the following do you utilize? Microphone Sprays (fumes) Music Speaker system Water
Will you be using a subcontractor to set up your display? Yes ___ No ___

SUBMIT APPLICATIONS via mail to PACIFIC EXPO 2200 Kamehameha Highway Suite 201 Honolulu HI 96817
VIA Email: sales@pacificexpos.com **/ Phone: 808 732.6037 / pacificexpos.com**
Your signature indicates acceptance of all management's terms and conditions, including any fines issued, as listed in this agreement and issued by Management.

GENERAL CONTRACT TERMS & CONDITIONS

IMPORTANT: READ ALL YOUR MATERIAL CAREFULLY
YOUR SIGNATURE ON THE CONTRACT INDICATES THAT YOU ACCEPT ALL THE TERMS OF THIS CONTRACT, PACIFIC EXPOS POLICIES, AND ANY FINES THAT MAY BE ISSUED. WE WILL NOT BE RESPONSIBLE FOR EVENTS THAT MAY OCCUR DUE TO LACK OF KNOWLEDGE OF POLICIES & PROCEDURES.

1. APPLICATION FOR SPACE: Except by written consent from Management, Exhibitor will not sublet the exhibit space contracted for and shall not exhibit or permit any merchandise other than specified on the Exhibitor Contract. No sharing booth space, advertising, promoting outside companies, or selling any product or service not provided by company occupying booth space. Management reserves the right to designate where exhibitors may present their displays. **Booth space is only confirmed after full payment and all necessary paperwork has been received.** No set-up allowed if balance is owed. Pacific Expos and VJ Entertainment, LLC. reserves the right to terminate any exhibitor contract for just cause. All payments are non-refundable, non-transferable.

2. PARKING. Exhibitors are responsible for parking fees, and will adhere to the parking rules of the venue. Overnight parking requests must be made with parking vendor.

3. CHECK-IN & EXHIBITOR WRISTBANDS: Check-in at show office before setting up exhibits. Wristbands to be worn by all Exhibitors staff snuggly on wrist for identification purposes. Entry not granted without wristband. FIVE (5**)** colored bands per booth, per day will be provided. Bands will not be distributed at check-in on Friday. Additional bands will not be issued.

4. ANIMALS: Pets and/or other animals are prohibited unless service animal with proper identification or animals used within exhibits and must be preapproved and conform to additional rules and regulations.

5. FINES IMPOSED FOR VIOLATIONS: A fine of $100.00 per infraction will be charged if exhibitors are found violating any of the following: A) If booth opens later than scheduled opening time on show days; B) If exhibitor closes/breaks-down earlier than closing time on any one of the two show days C) If exhibitor trash is found in trash bins on show floor, or if exhibitor is found dumping into trash bins on show floor. Bins in the hall are strictly for customer use; D) if residue is left on floor from the use of duct tape.

6. GENERAL LIABILITY INSURANCE: In accordance with the terms of the Exhibitor Contract, **all exhibitors** must submit a certificate of insurance. Must be received BEFORE start of show. Please name **PACIFIC EXPOS, c/o The AMP Group, LLC 2200 Kamehameha Hwy 201 Honolulu HI 96817 and VJ ENTERTAINMENT, LLC., (same address)** as additional insured. If needed, the following information can be forwarded to your insurance agent*: "Said policy shall not contain less than the following limits of liability: for bodily injury liability or loss sustained in one occurrence, $1,000,000; for personal injury liability sustained in one occurrence, $1,000,000; for damage or loss of use of property in each occurrence, $1,000,000."*

Failure by vendor to provide proof of insurance may be charged a **One-time general liability coverage available for $65.00 subject to approval by insurance company.** Failure to obtain insurance by vendor shall be at vendor's own risk. Call Pacific Expos' office for more information or email sales@pacificexpos.com One-time coverage, **subject to approval**, requires the following information: Legal Business Name, owner(s), business address, business phone, and authorization to charge $65 to your credit card. NOTE: Alcohol companies, food establishments, and any product or service demonstrations that include physical involvement with the public or sale of firearms or as determined by insurance company, do not qualify for the group insurance policy and must provide their own coverage.

7. INDEMNIFICATION AND ASSUMPTION OF RISK DISCLAIMER: Vendor shall indemnify and hold harmless Pacific Expos and The AMP Group, LLC, and VJ Entertainment, LLC., Inc., its officers, directors, staff, volunteers as well as venue management and staff from any and all liability as a result of injuries sustained by anyone due to product liability or negligence on the part of the Vendor. Pacific Expos and VJ Entertainment, LLC., Inc., shall not be liable to or be a party to any suit due to negligence of the Vendor including failure to obtain insurance.

Exhibitor has sole responsibility and expressly assumes all risks for its property, including, without limitation, any products displayed and/or left at the show, and any theft, damage or other loss to such property. Management accepts no responsibility, nor is bailment created, for such property of Exhibitor.

8. SOLICITATIONS: **By Non-Exhibitors.** Unauthorized solicitation within the exhibition space by individuals who did not buy booth space is strictly prohibited; report all non-exhibitor solicitations to Management immediately. **By Exhibitors.** Distribution of materials outside of your booth space is prohibited. All sales activities must remain **inside** your booth.

9. WITHDRAWAL/CANCELLATIONS: A full refund will be given if Exhibitor has informed Pacific Expos in writing no later than 4 weeks prior to show date. No refund will be given after 4 weeks. Failure to utilize booth space does not relieve the Exhibitor of its obligation for full payment. After execution, this contract cannot be revoked or cancelled—unless by mutual agreement and Exhibitor shall be liable for the full amount of this contract, plus interest at the maximum amount allowed by law and reasonable attorney fees and court costs if necessary, for collection purposes.

10. REASSIGNMENT: **If Exhibitor's booth is empty* at 9 am on Saturday, Pacific Expos and VJ Entertainment, LLC. reserves the right to reassign the booth without refund** (* = Exhibitor not checked in at show office and booth has no signs of commenced set-up, product, or display.)

11. LATE FEES, BALANCES, DISCOUNTS: A late fee of $10.00 per booth will be assessed to all new or unpaid booths after cut off date. Deposits and any other discounts may be forfeited and booth resold without full payment.

SUBMIT APPLICATIONS via mail to PACIFIC EXPO 2200 Kamehameha Highway Suite 201 Honolulu HI 96817
VIA Email: sales@pacificexpos.com / **Phone: 808 732.6037 / pacificexpos.com**
Your signature indicates acceptance of all Pacific Expos' terms and conditions, including any fines issued, as listed in this agreement and issued by Management.

To preserve the aisle sight line, ensure visibility of each Exhibitor, and encourage successful exchanges with other exhibitors and the public, each Exhibitor must comply with the sight line restrictions.

INLINE & CORNER BOOTHS: any part of your display in the front half of the booth must not exceed 4' (see diagram A). In the rear half of the booth, display (including banners) must not exceed 12'. 10x10 pop up tents OK but sidewalls must still comply with this sightline rule**.**

Diagram A

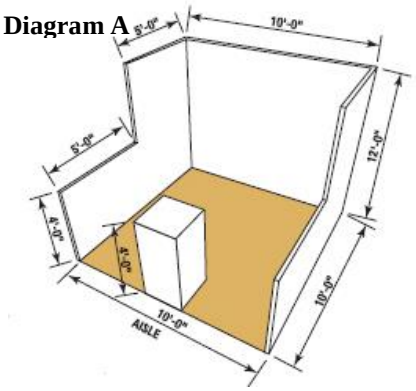

END CAP BOOTHS: end cap booths are exposed to the aisle on three sides and are made up of two booths. Booth display may not exceed 8' in the rear half of the booth and within 5' of the two side aisles. Any part of the display in the 5' closest to the aisles must not exceed 4' (see diagram B).

Diagram B

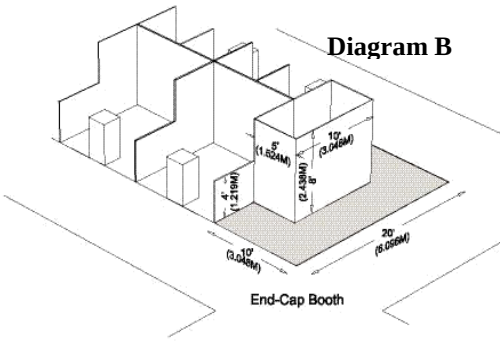

PENINSULA (ISLANDS)

BOOTHS: peninsula booths are exposed on three sides and made up of 4 booths. Booth display must not be higher than 12' within' 5' from the back wall. Display must not exceed 4' within 5' of each aisle (see diagram C). **All materials must be built so as not to obstruct the sight line of neighboring Exhibitors.**

Diagram C

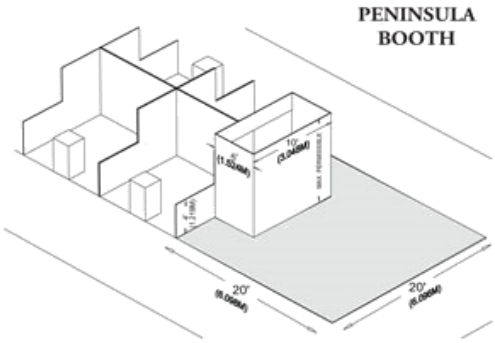

THIS AREA BLANK INTENTIONALLY FOR YOUR NOTES